Pre-fold
"Back Corners"

Place "Clips"
in the center of
the overlaps.

Note: The longer you make the side wings, the less rigid the carrel becomes.

"Back Corner"

"Back Corner"

"Side Wall"

"Side Wall"

Easy To Assemble Instructions

1) Slide "Back Corners" together to the desired width
2) Push "Clip Lock" over both pieces from the top
3) Slide "Side Walls" to the desired lengths
4) Push "Clip Lock" over both pieces from the top
5) Once you have the desired size, push bottom "Clip Locks" up to hold all pieces together

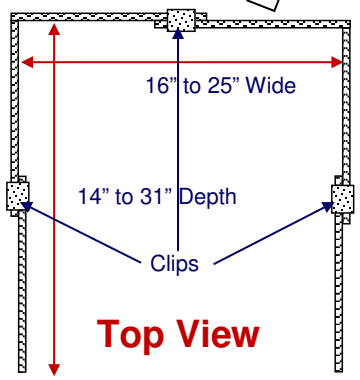

Top View

Kit includes:

2 – Back Corners, 2 – Side Walls and 6 Clip Locks

PrivacyShields.com a division of:

Classroom Products LLC

3741 Springfield Jamestown Road• Springfield • Ohio • 45502

1-800-315-0741 • Fax # 937-342-1703

www.privacyshields.com